SURFACE MOUNT CRYSTAL CLOCK OSCILLATOR FCXO-05

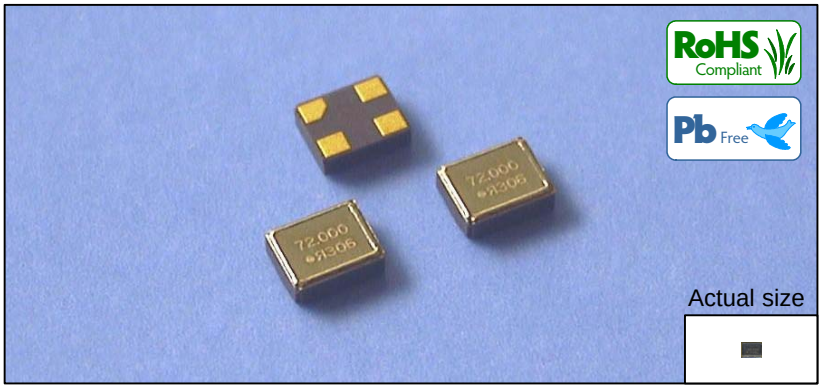

Features

- Compact design (2.5mm×2.0mm×0.9mm Max., Weight : 13mg).
- Ceramic package and metal lid assures extreme accuracy and high reliability by electron beam sealing.
- Lead-free soldering is available.
- Applications : Laptop PC, DSC, DVC, W-LAN

Dimensions

Unit : mm

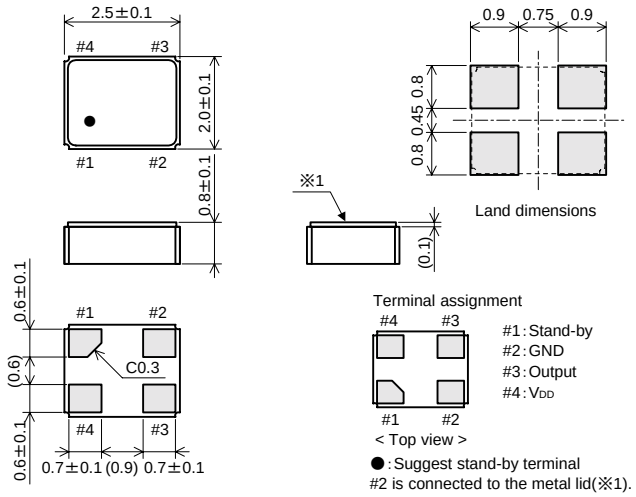

Taping

Unit : mm

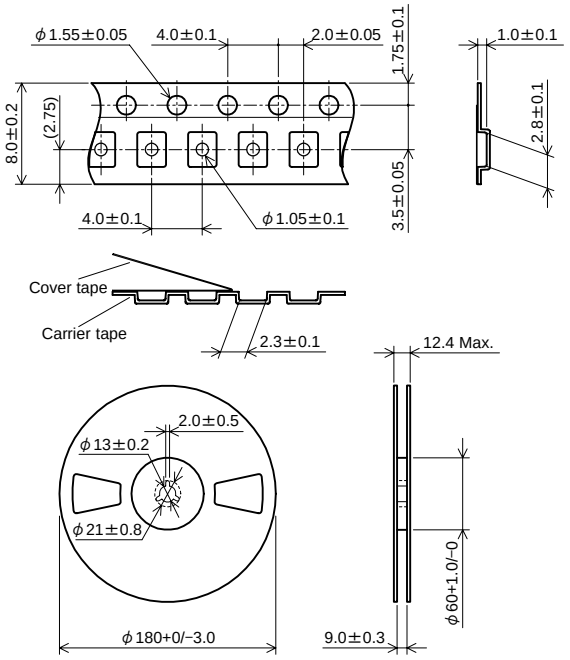

Quantity : 3000 pieces Max./Reel

Specifications

Item	Standard specifications		
Frequency range(MHz)	1.0 to 80.0		
Frequency tolerance (ppm)(at 25°C)	±10, ±20, ±30, ±50, ±100		
V_{DD} sensitivity(ppm)	±1.0		
Storage temperature range(°C)	−40 to +85		
Operating temperature range(°C)	−10 to +60	−20 to +70	−40 to +85
Frequency versus temperature characteristics(ppm) (Refer to 25°C)	±15 ±30 ±50 ±100	±20 ±30 ±50 ±100	±30 ±50 ±100
Supply voltage(V)	3.3±0.33, 2.5±0.25, 1.8±0.18		
Current consumption (mA)	5(Typ.)/20MHz@3V, 8(Typ.)/50MHz@3V (Depends on frequency and supply voltage)		
Output level	CMOS, TTL		
Symmetry(%)	50±10, 50±5		

"Stand-by" CTRL table

Stand-by	Output
"H"	Output enabled.
"L"	Oscillation stop and High impedance output.

- Bypass capacitor should be connected between V_{DD} and GND due to the stabilized operation for the crystal oscillator.
- Please consult us for customized specifications.
- All specfications and markings subjected to change without notice.

RIVER

RIVER ELETEC CORPORATION

URL http://www.river-ele.co.jp

Head Office : 2-1-1 Fujimigaoka Nirasaki Yamanashi Japan Phone 81-551-22-1211 Fax 81-551-22-6645
Tokyo Office : 4-40-14 Nishishinjuku Shinjuku-ku Tokyo Japan Phone 81-3-3377-5444 Fax 81-3-3374-2865
Utsunomiya Office : Phone 81-28-625-7181 Fax 81-28-625-7159
Osaka Office : Phone 81-6-6998-4888 Fax 81-6-6998-4899
Nagoya Office : Phone 81-52-776-9531 Fax 81-52-776-9532
River Electronics (Singapore) Pte.Ltd : Phone 65-6258-7874 Fax 65-6258-7366
(Shanghai Liaison Office) : Phone 86-21-64032210 Fax 86-21-64037412
Taiwan River Co.,Ltd. : Phone 886-2-8988-2811 Fax 886-2-2983-4785